Elec & Eltek依利安達
E & E Magnetic Products Limited

SHIELDED SURFACE MOUNT POWER INDUCTOR

Drum Type, SIS5D28R Series

- Magnetically Shielded
- Miniature in size and high energy storage
- Ideal for high current requirements of notebook, video recorders and other DC-DC conversion applications
- Custom inductance value or tolerance is available
- RoHS compliant

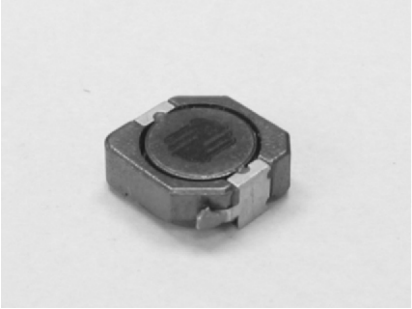

ELECTRICAL SPECIFICATION @ 25°C

Part Number	Inductance (uH)	Inductance Tolerance	Test Frequency[2] (Hz)	DCR (m Max)	Rated DC Current[3] (A)	Marking (XYYY)
SIS5D28RN-2R5R	2.5	±30	100k	17.6	2.60	N2R5
SIS5D28RN-3R3R	3.3	±30	100k	20.3	2.30	N3R3
SIS5D28RN-4R0R	4.0	±30	100k	27.0	2.10	N4R0
SIS5D28RN-5R0R	5.0	±30	100k	31.1	1.85	N5R0
SIS5D28RN-6R0R	6.0	±30	100k	41.9	1.70	N6R0
SIS5D28RN-8R0R	8.0	±30	100k	49.9	1.50	N8R0
SIS5D28RN-100R	10	±30	100k	54.0	1.30	N100
SIS5D28RN-120R	12	±30	100k	71.6	1.20	N120
SIS5D28RN-150R	15	±30	100k	82.4	1.10	N150
SIS5D28RN-180R	18	±30	100k	101.5	1.05	N180
SIS5D28RN-220R	22	±30	100k	119.0	0.95	N220
SIS5D28RN-270R	27	±30	100k	146.0	0.85	N270
SIS5D28RN-330R	33	±30	100k	182.5	0.76	N330
SIS5D28RN-390R	39	±30	100k	209.5	0.68	N390
SIS5D28RN-470R	47	±30	100k	229.5	0.60	N470
SIS5D28RN-560R	56	±30	100k	305.0	0.55	N560
SIS5D28RN-680R	68	±30	100k	351.0	0.48	N680
SIS5D28RN-820R	82	±30	100k	418.5	0.45	N820
SIS5D28RN-101R	100	±30	100k	520.0	0.40	N101

Notes:

1. Ordering Information: SIS5D28Ra - bbbRc.

   SIS5D28R = Product Type.
   a = Tolerance of Inductance (N= ±30%).
   bbb = Inductance value in uH (i.e. 3R3 = 3.3uH; 330 = 33uH; 101 = 100uH).
   R = Internal Control Code.
   c = Packaging Code (U = Tape & Reel Packaging in 7 inch Reel).

2. Test frequency is specified as the frequency for measuring the inductance.
3. Rated D.C. current indicates the value of the current when the inductance is 35% lower than its initial value or the current when temperature rising T=40°C at D.C. superposition.
4. Operating temperature range: -40°C to +125°C.
5. The part temperature (ambient temperature + temperature rise) should not exceed the upper limit of the operating temperature under worst case operating conditions. Circuit design, component placement, PWB

1/F., Harbour View 1, No.12 Science Park East Avenue, Phase II, Hong Kong Science Park, Shatin, N.T. Hong Kong
Tel: (852) 2954 3333 • Fax: (852) 2954 3304

MECHANICAL DIMENSIONS

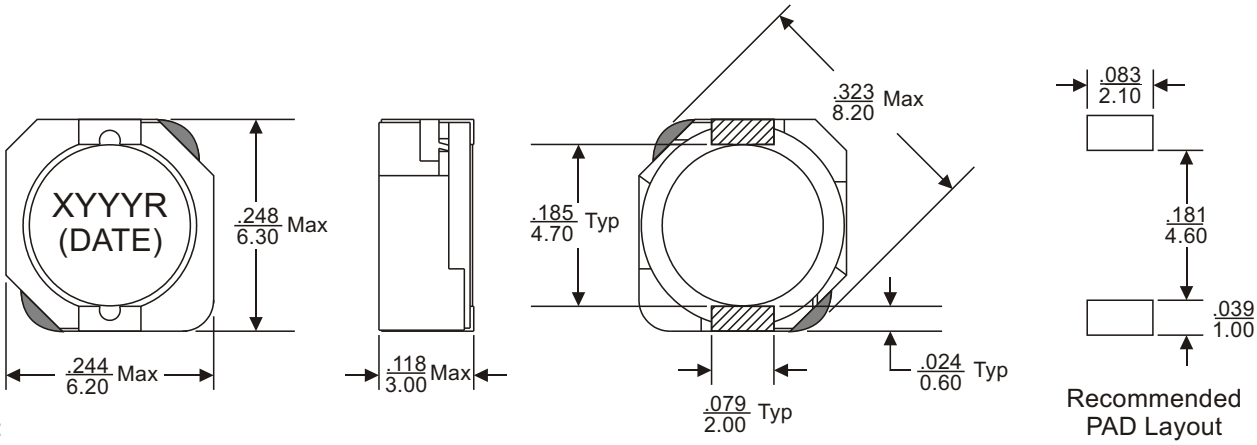

Notes:

trace size and thickness, airflow and other cooling provisions all affect the part temperature. Part temperature should be verified in the end application.

6. All dimensions are specified in $\frac{\text{inches}}{\text{mm}}$ with higher precedence in mm.
7. Unless otherwise specified, all tolerances are ± $\frac{.010}{0.25}$

Weight (in gram)	:	3.0 typ.
Tape & Reel	:	550 / reel

SCHEMATIC

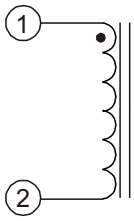

PACKAGING

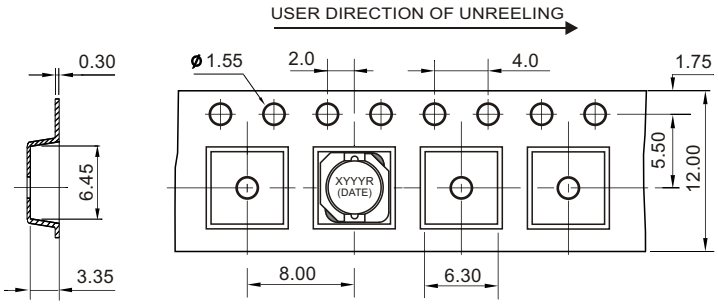

FOR MORE INFORMATION, PLEASE CONTACT

HEADQUARTER
1/F., Harbour View 1, No.12 Science Park East Avenue,
Phase II, Hong Kong Science Park, Shatin, N.T.
Hong Kong
Tel: (852) 2954 3333 Fax: (852) 2954 3304
Email: eempl@eleceltek.com
Website: http://www.eleceltek.com / www.eemagnetic.com

Information herein is for reference only and subject to change without notice. It does not constitute any representation, warranty or commitment of the company in respect of the products in any aspect. All logos, brands and product names mentioned herein are trademarks or registered trademarks of their respective owners. The company does not assume any liability arising out of the application or use of any product or circuit described herein. Copyrights 2009, E & E Magnetic Products Limited.